INVERTED

Residential ESS that delivers uninterrupted power and smarter energy use for modern homes. Its sleek and modular design integrates effortlessly with Inverters and solar setups, offering reliable and consistent backup and efficient energy management. ARRAY is your ideal solution for energy independence, combining performance, style, and peace of mind.

ARRAY

48 V 105 Ah



Product Features

Power connectors

Durable connectors ensure quick, secure, and efficient power transfer.

Smart communication

Supports CAN & RS485 for real-time monitoring and smart inverter integration.

IP -55 protection

With an IP55-rated enclosure, It is protected against dust and water, ensuring durability in various environmental conditions.

Ergonomics Handles

Ergonomic handles enable safe, balanced, and easy lifting.

High efficiency

Achieves 94% efficiency with hybrid inverters, optimizing energy utilization.

Hybrid inverter compatibility

Designed to work with a wide range of smart hybrid inverters across popular brands

Technical Specifications

Parameter	Value	Parameter	Value
Battery capacity	5.04 kWh	Charging method	CC / CV
Battery type	Li-On	Operation DOD range	95 %
Cell chemistry	LFP	Communication interface / protocol	CAN / RS 485
Cell form	Prismatic	Operating temperature (charging)	0 to 55 ° C
Cell model	3.2 V 105 Ah	Operating temperature (discharging)	-10 to 55 °C
Nominal voltage	48 V	Storage temperature for 6 months	0 to 35 °C
Battery capacity	105 Ah	Electrical protection	Fuse
Pack configuration	15S 1P	Life cycle @ 0.5 chg/dschg rate	3000 cycles
Peak charging current	0.5 C	Product dimension	525 x 450 x 180 mm
Peak discharging current	1C for 10 sec	IP protection	IP55
Rated charging current	0.3 C	Weight	~46 kg
Rated discharging current	0.7 C	Mounting type	Wall mount

Product Dimensions

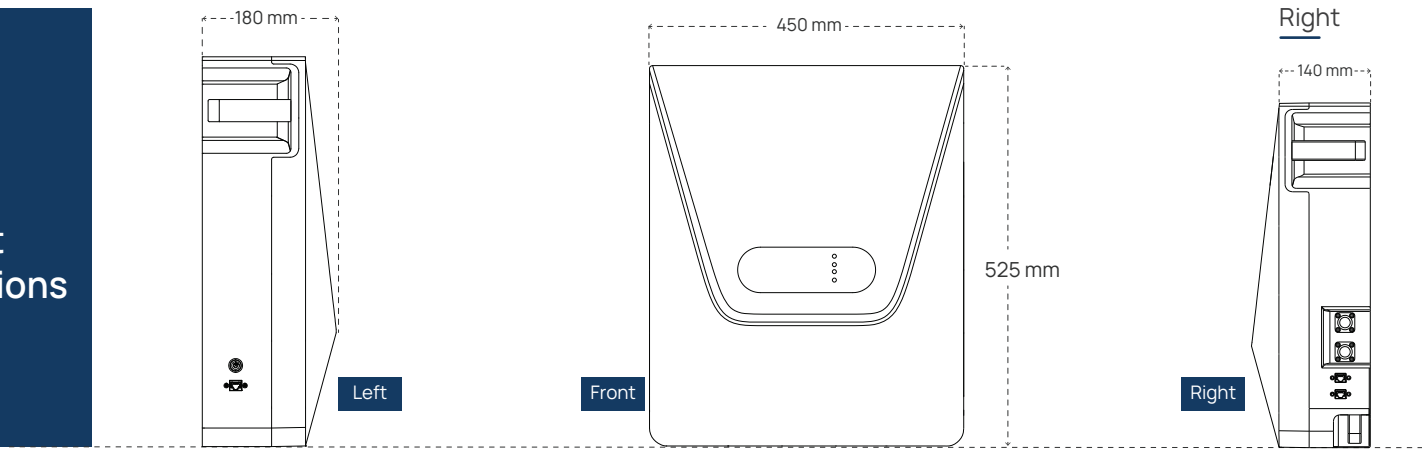

Modular Design

Upto 8 units
in parallel

